DEMZ1 Demlone

Ultra Hight Demolition

Technical Supplement

Dimensions and Weights - UHD Configuration

DEM70 with ultra-high demolition front - All dimensions and weights are approximate.

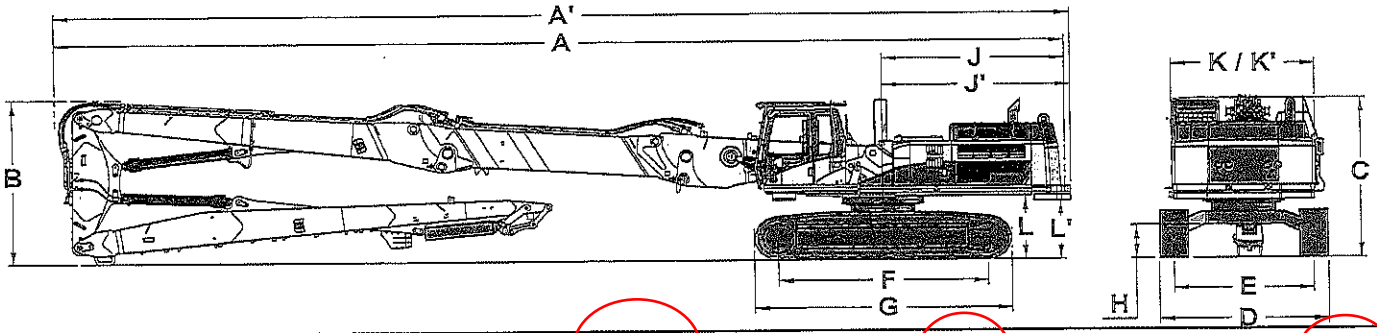

Configuration			26 m (without extension)		29 m (with 3m extension)		31 m (with 5m extension)	
Undercarriage			LVG	HVG	LVG	HVG	LVG	HVG
A Shipping length		mm	15860	15860	18855	18855	20850	20850
A' With additionnal counterweight 3000 kg		mm	16040	16040	19035	19035	21030	21030
B Boom height		mm	3650	3650	3650	3650	3650	3650
C Cab height *		mm	3570	3547	3570	3547	3570	3547
D Overall width **	with 600 mm shoes	mm	2990	3000	2990	3000	2990	3000
	with 750 mm shoes	mm	3140	3150	3140	3150	3140	3150
E Track gauge	Fully retracted	mm	2390	2400	2390	2400	2390	2400
	Fully extended	mm	2890	3010	2890	3010	2890	3010
F Length to the center of roller		mm	4340	4340	4340	4340	4340	4340
G Tracks length		mm	5330	5330	5330	5330	5330	5330
H Ground clearance		mm	740	460	740	460	740	460
J Swing radius		mm	3770	3770	3770	3770	3770	3770
J' With additionnal counterweight 3000 kg		mm	3950	3950	3950	3950	3950	3950
K Body width		mm	2980	2980	2980	2980	2980	2980
K' With bumpers		mm	3110	3110	3110	3110	3110	3110
L Under counterweight height		mm	1435	1412	1435	1412	1435	1412
L' With additionnal counterweight 3000 kg		mm	1305	1282	1305	1282	1305	1282
Weight ***		kg	55950	61900	57850	63800	58450	64400
With additionnal counterweight 3000 kg		kg	58950	64900	60850	66800	61450	67400

* With Falling Object Guard (FOG) and tiltable cab

** With tracks fully retracted, if applicable.

*** With ultra-high demolition front parts, undercarriage, tiltable cab, FOG and full fuel tank

LVG DEM70 with Long undercarriage

HVG DEM70 with Hydraulic Variable Gauge

Dimensions and Weights - Retrofit Configurations

DEM70 with retrofit boom in straight and bent position - All dimensions and weights are approximate.

DEM70 with retrofit boom in bent position

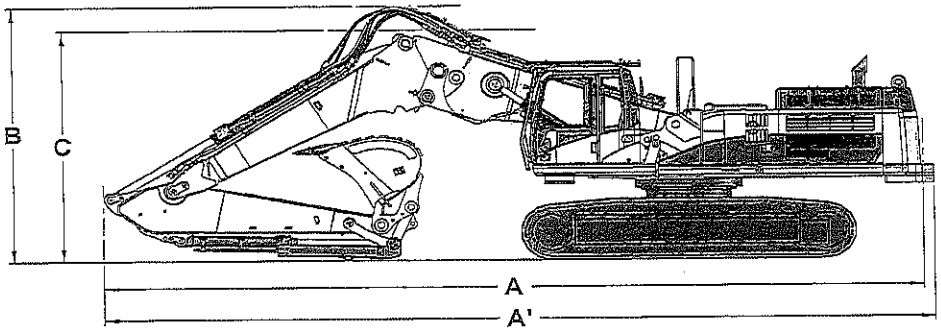

DEM70 with retrofit boom in straight position

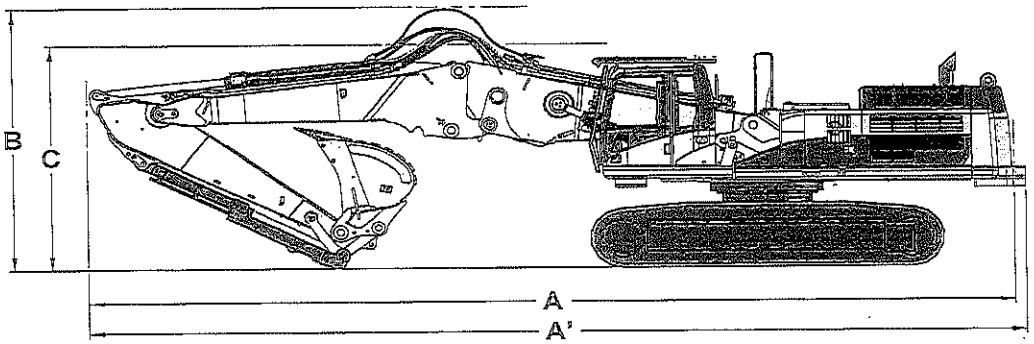

Stick length		mm	3400
Bucket capacity		m³	2,05
A	Shipping length*		
	Straight position	mm	13900
	Bent position	mm	13000
A'	With additionnal counterweight 3000 kg		
	Straight position	mm	14080
	Bent position	mm	13180
B	Shipping height for LVG and HVG with hydraulic hose connected		
	Straight position	mm	4375
	Bent position	mm	4450
C	Shipping height for LVG and HVG with hydraulic hose disconnected		
	Straight position	mm	3750
	Bent position	mm	4080
Operating weight with retrofit boom nose**			
	LVG undercarriage	kg	55300
	HVG undercarriage	kg	61255
With additionnal counterweight 3000 kg			
	LVG undercarriage	kg	58300
	HVG undercarriage	kg	64255

* With stick cylinder extended. Retracting the stick cylinder might decrease the shipping height but will increase shipping length.

** With 2191 kg bucket (2,05 m³)

Dimensions and Weights - Retrofit Configurations

DEM70 with retrofit boom in straight and 3m extension - All dimensions and weights are approximate.

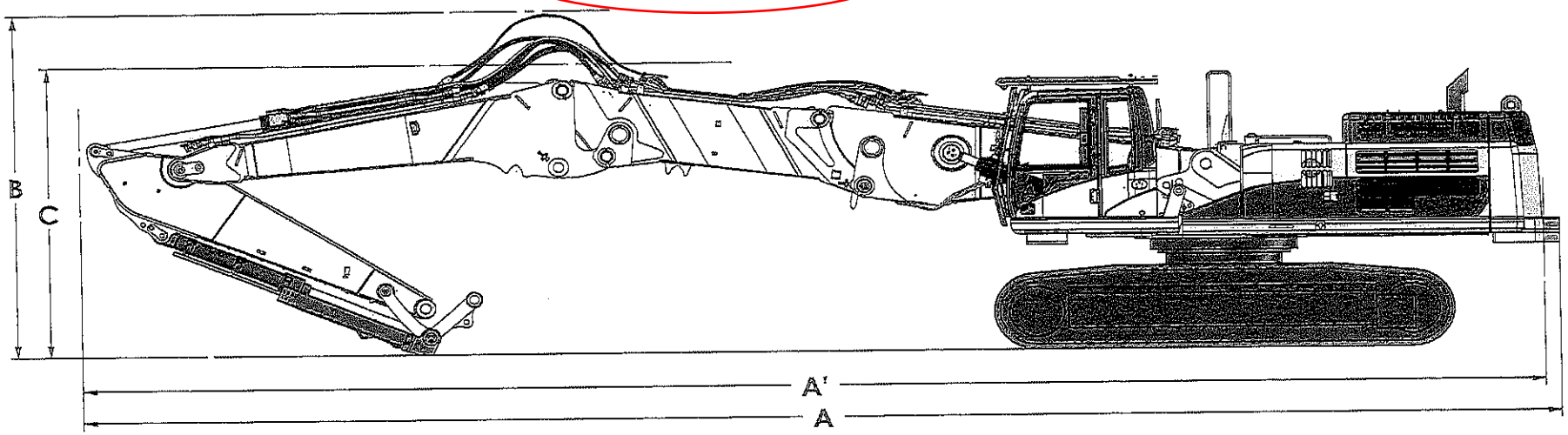

Stick length		mm	3400
Extension		mm	3000
A	Shipping length*		
	Straight position	mm	16915
A'	With additionnal counterweight 3000 kg		
	Straight position	mm	17095
B	Shipping height for LVG and HVG with hydraulic hose connected		
	Straight position	mm	4560
C	Shipping height for LVG and HVG with hydraulic hose disconnected		
	Straight position	mm	3760
Operating weight with retrofit boom nose**			
	LVG undercarriage	kg	55000
	HVG undercarriage	kg	60955
With additionnal counterweight 3000 kg			
	LVG undercarriage	kg	58000
	HVG undercarriage	kg	63955

* With stick cylinder extended. Retracting the stick cylinder might decrease the shipping height but will increase shipping length.

** Without tool

Dimensions and Weights - Base machine

DEM70 with boom cylinders and boom foot - All dimensions and weights are approximate.

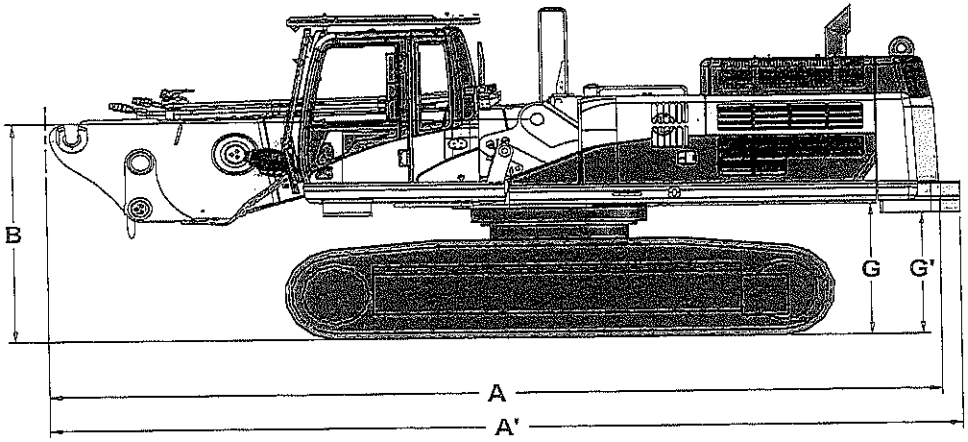

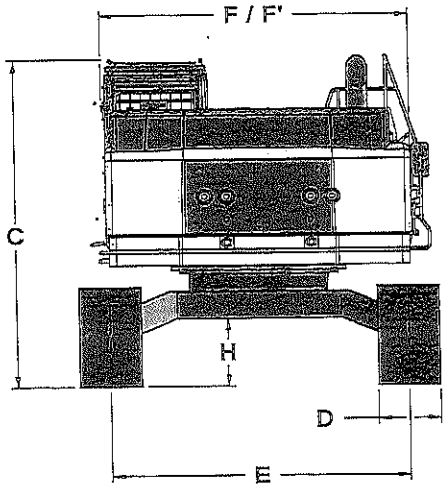

Undercarriage			LVG	HVG
A	Length	mm	8640	8640
A'	With additional counterweight 3000 kg	mm	8820	8820
B	Boom height	mm	2390	2367
C	Height with overhead guard	mm	3570	3547
D	Track shoe width	mm	600 / 750	600 / 750
E	Narrow gauge	mm	2390	2400
	Working gauge	mm	2890	3010
F	Body width	mm	2980	2980
F'	With bumpers	mm	3110	3110
G	Under counterweight height	mm	1435	1412
G'	With additional counterweight 3000 kg	mm	1305	1282
H	Ground clearance	mm	740	460
Weight*		kg	47175	53130
Weight* with additionnal counterweight 3000 kg		kg	50175	56130

* Hydraulic lines included and boom cylinders fully retracted

LVG DEM70 with Long undercarriage
HVG DEM70 with Hydraulic Variable Gauge

Dimensions and Weights - Front Parts

DEM70 Ultra-High Demolition front parts - All dimensions and weights are approximate.

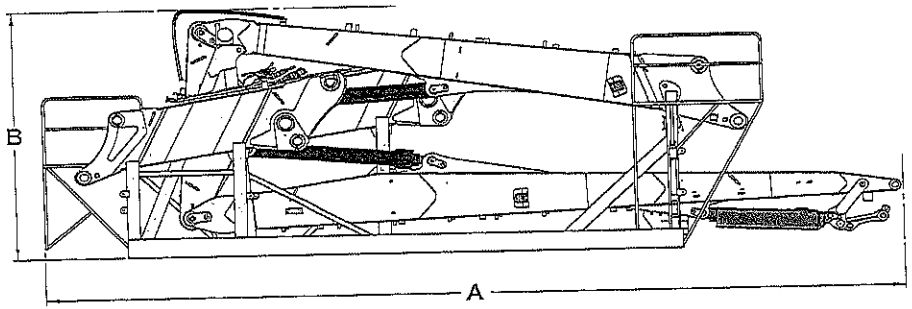

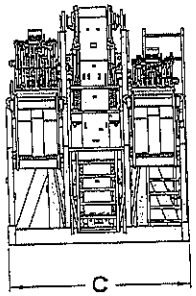

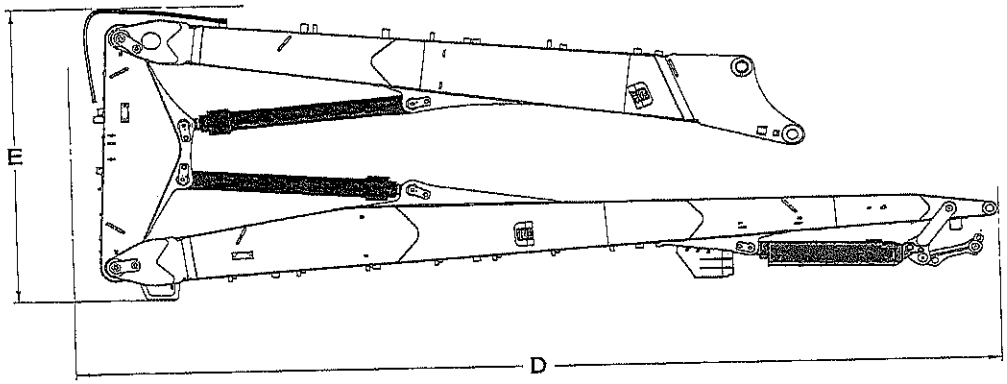

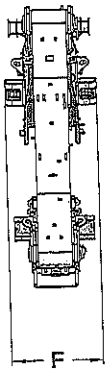

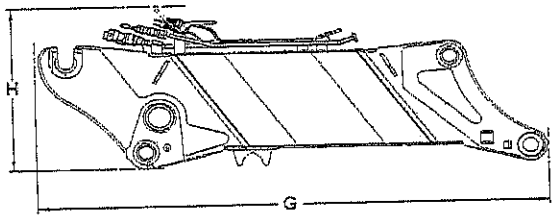

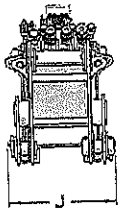

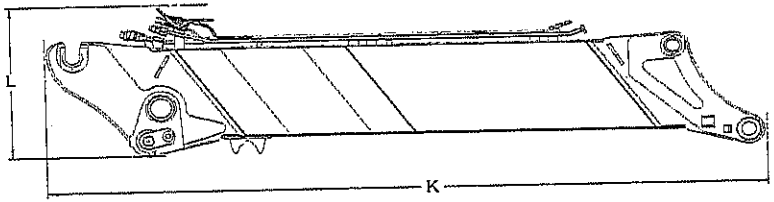

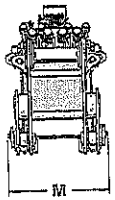

UHD front parts and support

A	UHD support length	mm	11850
B	UHD support height *	mm	3800
C	UHD support width	mm	2500
UHD front parts and support weight **		kg	16020

UHD front parts

D	UHD front parts length	mm	10250
E	UHD front parts height *	mm	3625
F	UHD front parts width	mm	1050
UHD front parts weight **		kg	8720
UHD boom nose weight ***		kg	2650
UHD fore boom weight ***		kg	1060
UHD stick weight ***		kg	2550

3m extension

G	UHD 3m extension Length	mm	4000
H	UHD 3m extension Height	mm	1400
J	UHD 3m extension Width	mm	870
UHD 3m extension weight ***		kg	1900

5m extension

K	UHD 5m extension Length	mm	6000
L	UHD 5m extension Height	mm	1400
M	UHD 5m extension Width	mm	870
UHD 5m extension weight ***		kg	2500

* Hydraulic lines included

** Cylinders and hydraulic lines included

*** Cylinders not included

Dimensions and Weights - Front Parts

DEM70 retrofit front parts - All dimensions and weights are approximate.

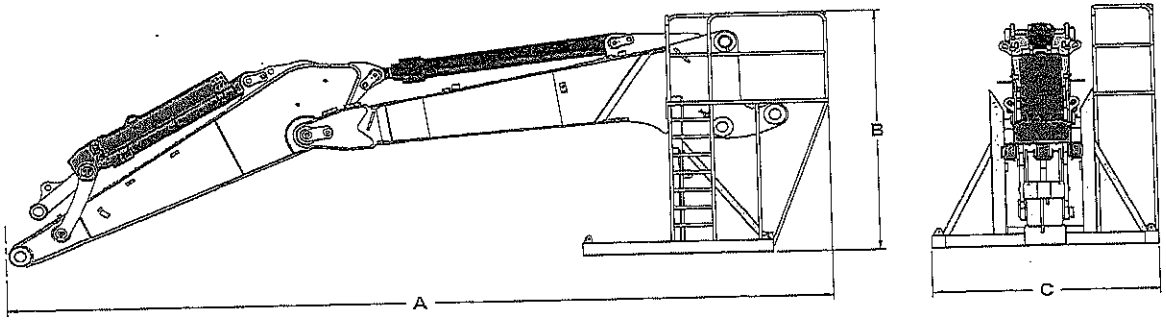

Retrofit front parts and support

A	Retrofit support length *	mm	8700
B	Retrofit support height	mm	2830
C	Retrofit support width	mm	2400
Retrofit front parts and support weight **		kg	7000
Retrofit boom nose weight ***		kg	2680
Retrofit stick weight ***		kg	1900
Retrofit support weight		kg	550

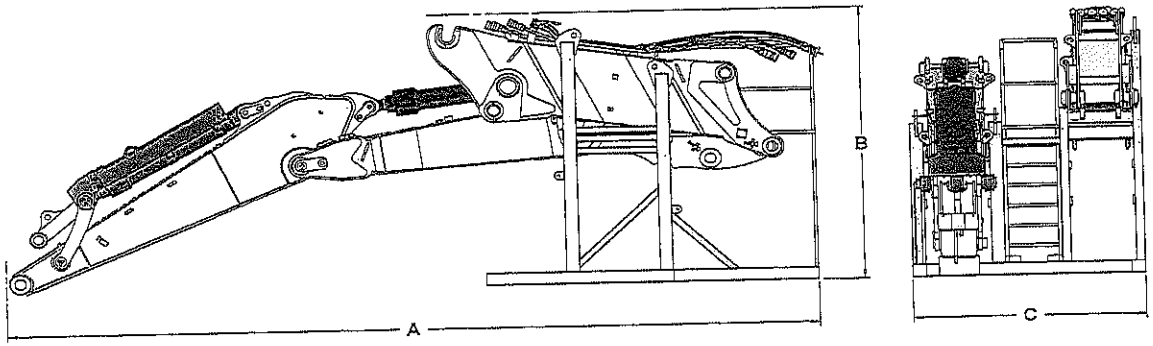

Retrofit front parts, 3m extension, support

A	Retrofit support length *	mm	8700
B	Retrofit support height	mm	3260
C	Retrofit support width	mm	2500
Retrofit front parts and support weight **		kg	9220
Retrofit boom nose weight ***		kg	2680
Retrofit stick weight ***		kg	1900
UHD 3m extension weight ***		kg	1900
Retrofit support weight		kg	870

* Without bucket

** Cylinders and hydraulic lines included (without bucket)

*** Cylinders not included

Working Ranges - UHD Configurations

DEM70 with Ultra-High Demolition front and 5m extension - 31 m

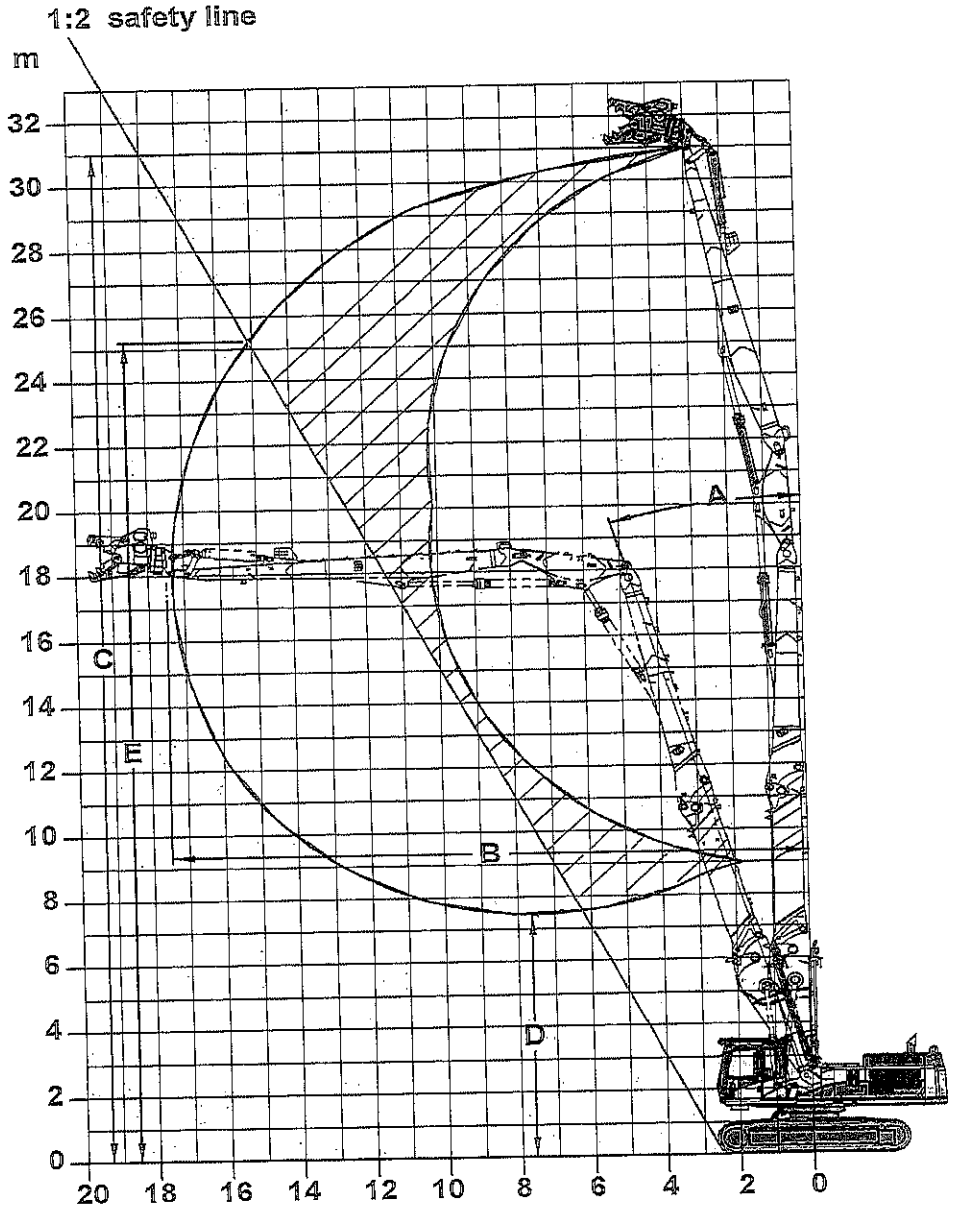

A	Maximum allowable angle from vertical	
	LVG undercarriage - Over front	17°
	LVG undercarriage - Over side	not authorized
	HVG undercarriage - Over front	17°
	HVG undercarriage - Over side	not authorized
B	Maximum allowable horizontal reach	
	LVG undercarriage - Over front	17500 mm
	LVG undercarriage - Over side	not authorized
	HVG undercarriage - Over front	17500 mm
	HVG undercarriage - Over side	not authorized
C	Maximum vertical pin height	31000 mm
D	Minimum pin height	
	LVG undercarriage - Over front	7380 mm
	LVG undercarriage - Over side	not authorized
	HVG undercarriage - Over front	7380 mm
	HVG undercarriage - Over side	not authorized
E	Maximum vertical pin height with 1/2 safety line	
	LVG undercarriage - Over front	25340 mm
	LVG undercarriage - Over side	not authorized
	HVG undercarriage - Over front	25340 mm
	HVG undercarriage - Over side	not authorized
Maximum tool weight *		
	LVG undercarriage - Over front	2500 kg
	LVG undercarriage - Over side	not authorized
	HVG undercarriage - Over front	2500 kg
	HVG undercarriage - Over side	not authorized

* Weight includes mounting bracket and quick coupler (if any).Design of the mounting bracket and quick coupler is critical. Distance between stick nose and center of gravity cannot exceed 1500 mm.

LVG DEM70 with Long undercarriage

HVG DEM70 with Hydraulic Variable Gauge.

Working Ranges - UHD Configurations

DEM70 with Ultra-High Demolition front and 3m extension - 29 m

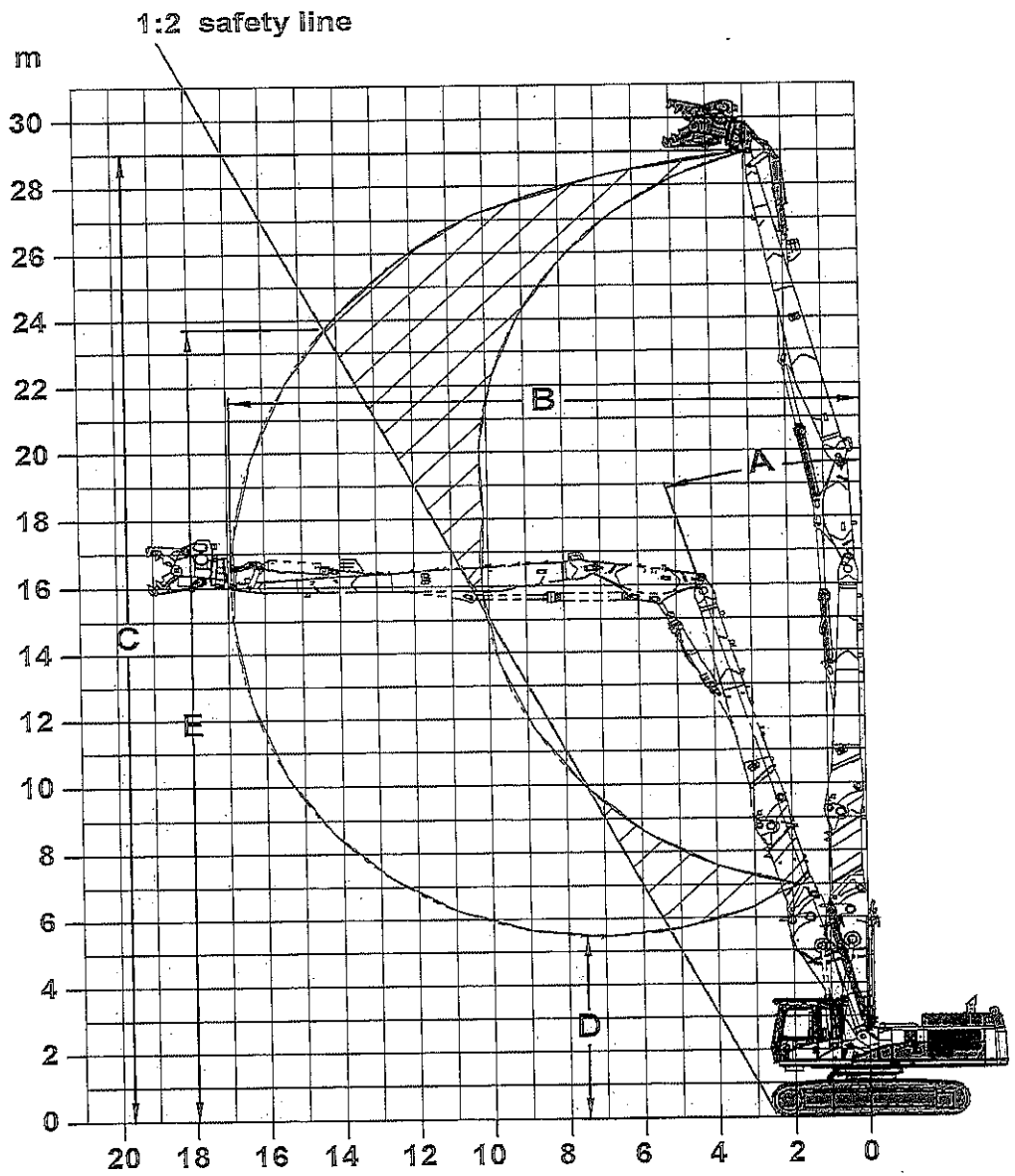

A	Maximum allowable angle from vertical	
	LVG undercarriage - Over front	17°
	LVG undercarriage - Over side	17°
	HVG undercarriage - Over front	17°
	HVG undercarriage - Over side	17°
B	Maximum allowable horizontal reach	
	LVG undercarriage - Over front	16907 mm
	LVG undercarriage - Over side	16907 mm
	HVG undercarriage - Over front	16907 mm
	HVG undercarriage - Over side	16907 mm
C	Maximum vertical pin height	29000 mm
D	Minimum pin height	
	LVG undercarriage - Over front	5470 mm
	LVG undercarriage - Over side	5470 mm
	HVG undercarriage - Over front	5470 mm
	HVG undercarriage - Over side	5470 mm
E	Maximum vertical pin height with 1/2 safety line	
	LVG undercarriage - Over front	23720 mm
	LVG undercarriage - Over side	23720 mm
	HVG undercarriage - Over front	23720 mm
	HVG undercarriage - Over side	23720 mm
Maximum tool weight *		
	LVG undercarriage - Over front	3000 kg
	LVG undercarriage - Over side	2800 kg
	HVG undercarriage - Over front	3000 kg
	HVG undercarriage - Over side	3000 kg

* Weight includes mounting bracket and quick coupler (if any).Design of the mounting bracket and quick coupler is critical. Distance between stick nose and center of gravity cannot exceed 1500 mm.

LVG DEM70 with Long undercarriage

HVG DEM70 with Hydraulic Variable Gauge.

Working Ranges - UHD Configurations

DEM70 with Ultra-High Demolition front without extension - 26 m

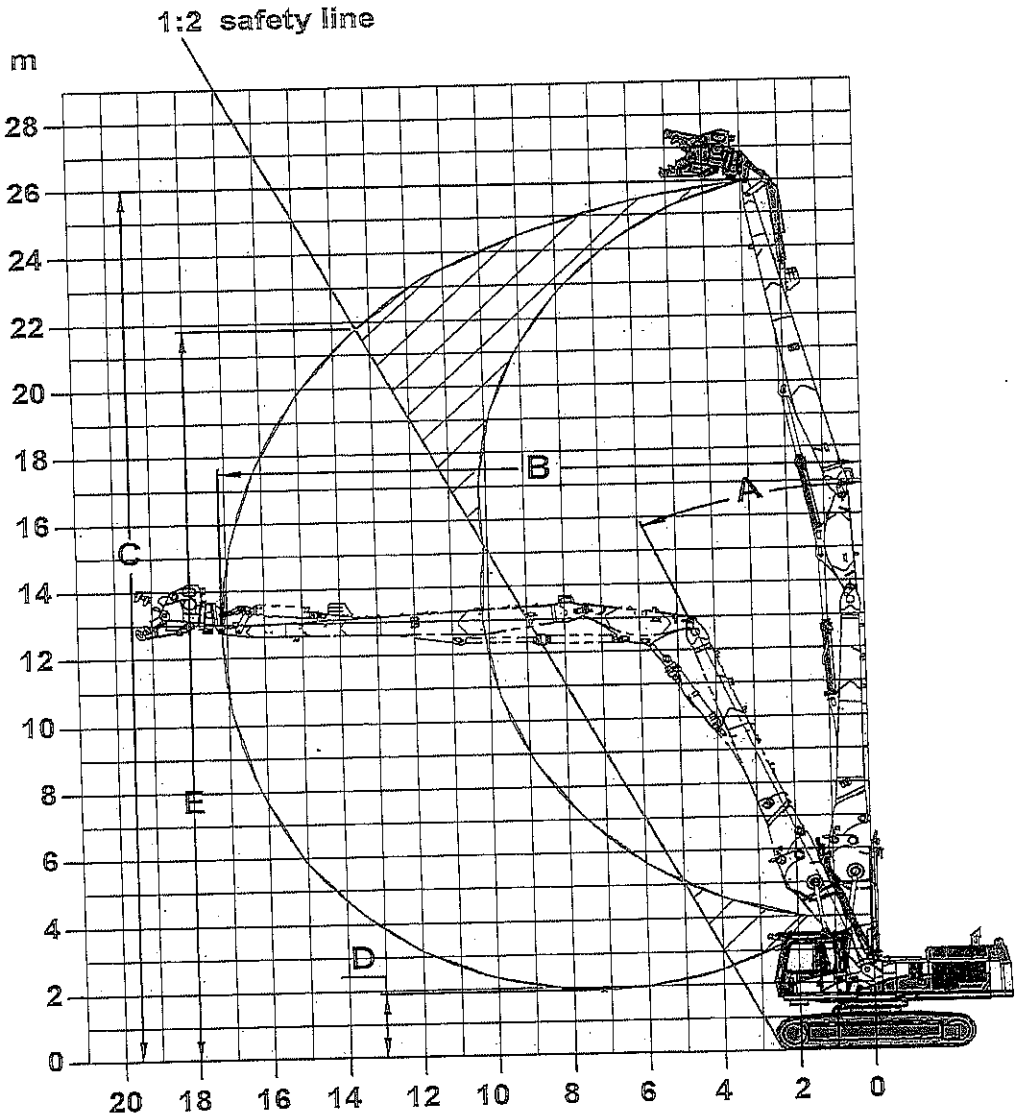

A	Maximum allowable angle from vertical	
	LVG undercarriage - Over front	23°
	LVG undercarriage - Over side	23°
	HVG undercarriage - Over front	23°
	HVG undercarriage - Over side	23°
B	Maximum allowable horizontal reach	
	LVG undercarriage - Over front	17150 mm
	LVG undercarriage - Over side	17150 mm
	HVG undercarriage - Over front	17150 mm
	HVG undercarriage - Over side	17150 mm
C	Maximum vertical pin height	26000 mm
D	Minimum pin height	
	LVG undercarriage - Over front	1920 mm
	LVG undercarriage - Over side	1920 mm
	HVG undercarriage - Over front	1920 mm
	HVG undercarriage - Over side	1920 mm
E	Maximum vertical pin height with 1/2 safety line	
	LVG undercarriage - Over front	21800 mm
	LVG undercarriage - Over side	21800 mm
	HVG undercarriage - Over front	21800 mm
	HVG undercarriage - Over side	21800 mm
Maximum tool weight *		
	LVG undercarriage - Over front	3500 kg
	LVG undercarriage - Over side	3000 kg
	HVG undercarriage - Over front	3500 kg
	HVG undercarriage - Over side	3500 kg

* Weight includes mounting bracket and quick coupler (if any).Design of the mounting bracket and quick coupler is critical. Distance between stick nose and center of gravity cannot exceed 1500 mm.

LVG DEM70 with Long undercarriage

HVG DEM70 with Hydraulic Variable Gauge

Working Ranges - Retrofit Configurations

DEM70 with retrofit boom in bent position

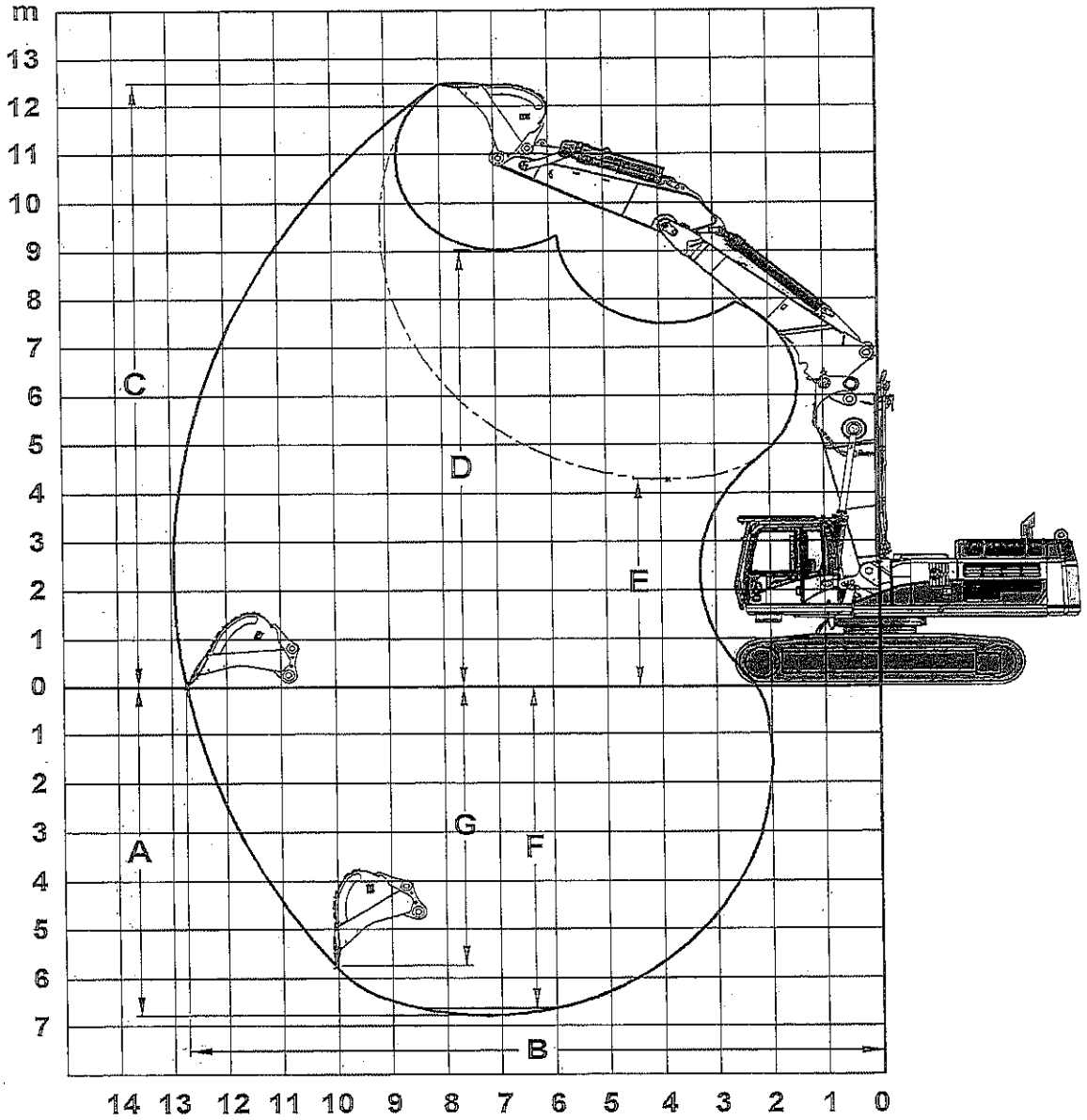

Bent Position

Stick Lenght		mm	3400
A	Maximum Digging Depth	mm	-6775
B	Maximum Reach at Ground Level	mm	12741
C	Maximum Cutting Height	mm	12480
D	Maximum Loading Height	mm	9031
E	Minimum Loading Height	mm	4292
F	Maximum Digging Depth 2,5 m Level Bottom	mm	-6624
G	Maximum Vertical Wall Digging Depth	mm	-5746
Bucket Digging Force (ISO 6015)		kN	229
Stick Digging Force (ISO 6015)		kN	194
Bucket Size		m^3	2,05
Tip Radius		mm	1890

Working Ranges - Retrofit Configurations

DEM70 with retrofit boom in straight position

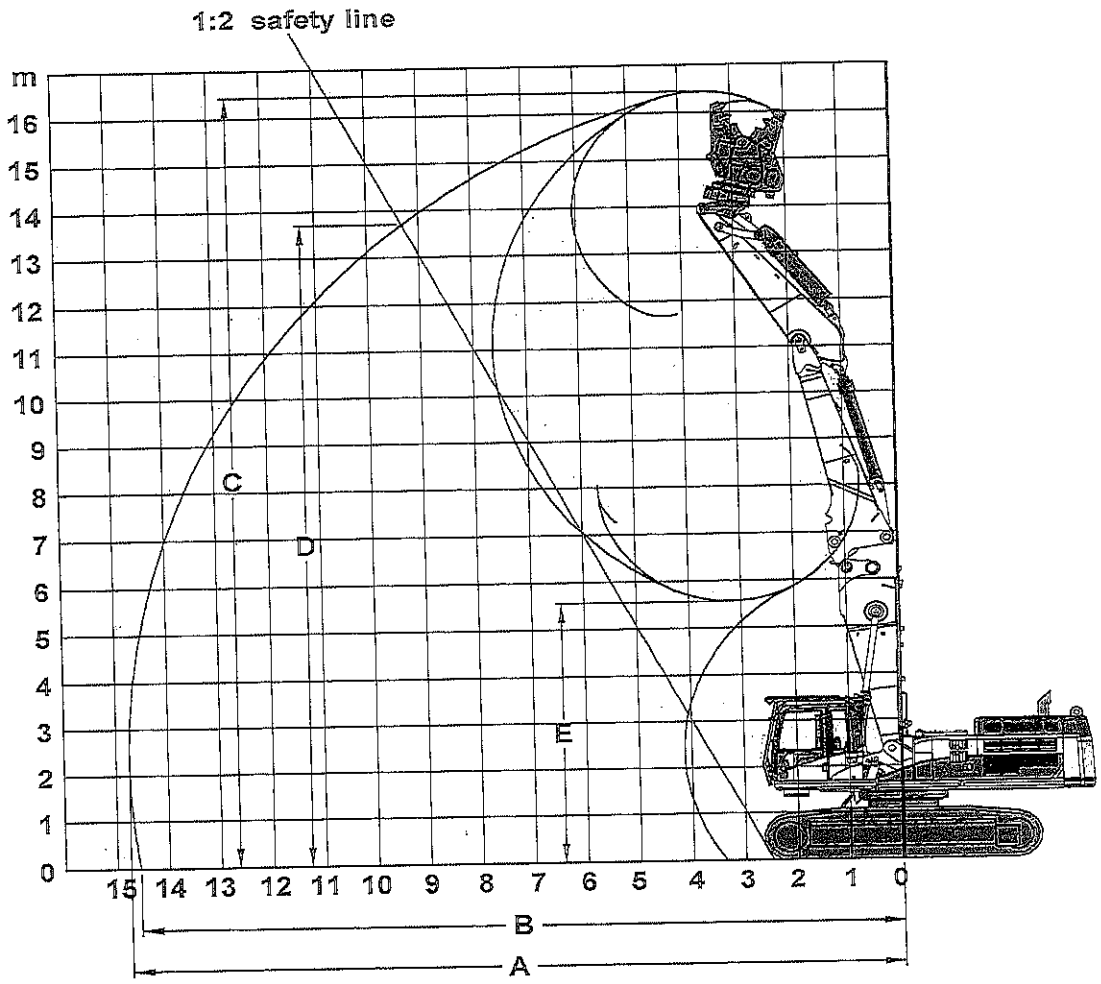

Straight Position

Stick Lenght		mm	3400
A	Maximum Reach	mm	14750
B	Maximum Reach at Ground Level	mm	14560
C	Maximum Vertical Tool Height	mm	16445
D	Maximum Vertical Height With 1/2 Safety	mm	13700
E	Minimum Vertical Tool Height	mm	5575
Maximum Reach With MP20-CR and CW-45 (3567Kg) With or Without Additionnal Counterweight 3000 kg			
	LVG Undercarriage Over Front	All The Working Ranges	
	LVG Undercarriage Over Side		
	HVG Undercarriage Over Front	All The Working Ranges	
	HVG Undercarriage Over Side		
Maximum Reach With MP30-TS and CW-45 (4866Kg) With or Without Additionnal Counterweight 3000 kg			
	LVG Undercarriage Over Front	All The Working Ranges	
	LVG Undercarriage Over Side		
	HVG Undercarriage Over Front	All The Working Ranges	
	HVG Undercarriage Over Side		
Tip Radius MP20		mm	2500

Working Ranges - Retrofit Configurations

DEM70 with retrofit boom in straight position and extension 3m

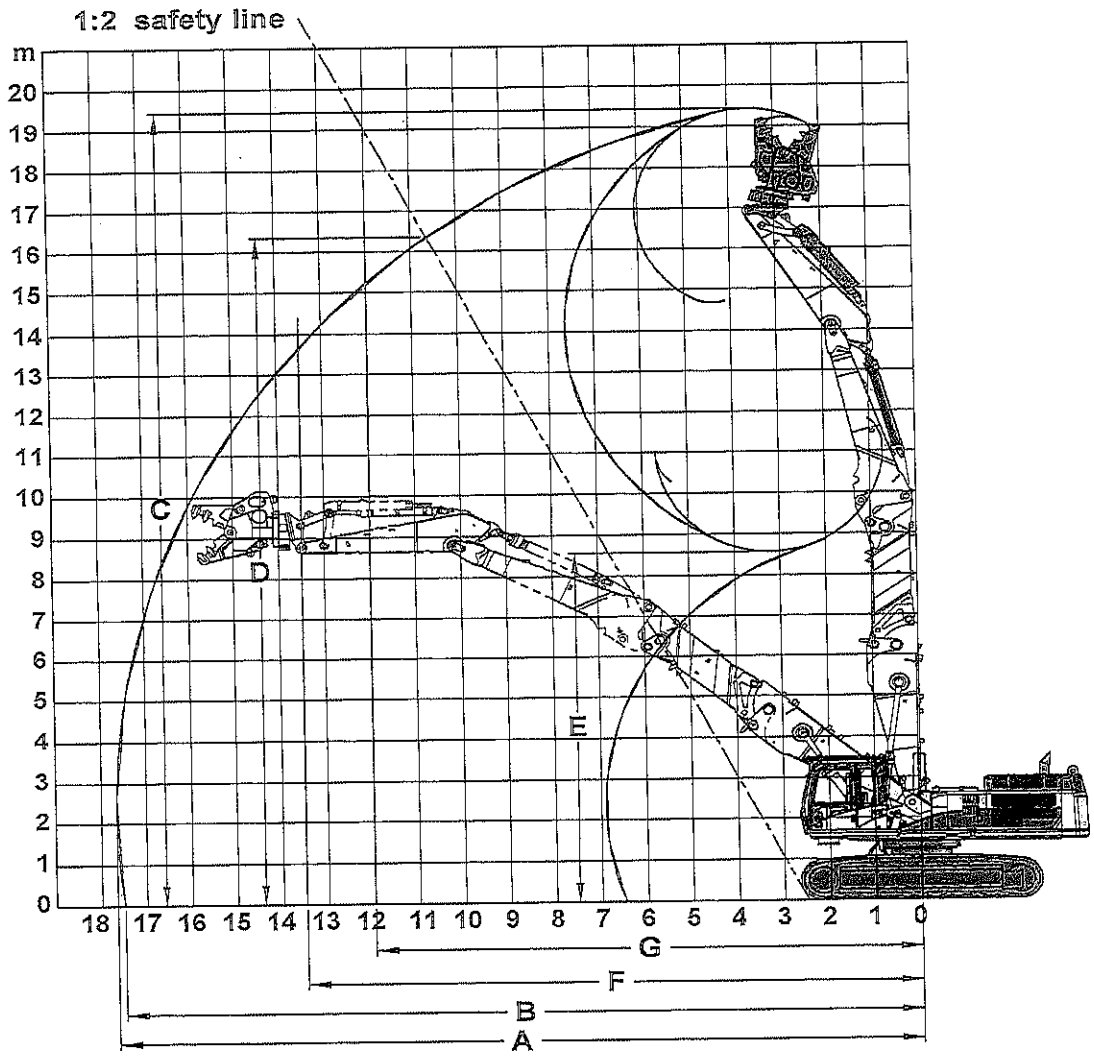

Straight Position With 3m Extension

Stick Lenght		mm	3400
A	Maximum Reach	mm	17660
B	Maximum Reach at Ground Level	mm	17500
C	Maximum Vertical Tool Height	mm	19440
D	Maximum Vertical Height With 1/2 Safety	mm	16355
E	Minimum Vertical Tool Height	mm	8575
F	Maximum Reach With MP20-CR and CW-45 (3567Kg)		
	LVG Undercarriage Over Front	mm	15000
	LVG Undercarriage Over Side	mm	13000
	HVG Undercarriage Over Front	All The Working Ranges	
	HVG Undercarriage Over Side		
G	Maximum Reach With MP30-TS and CW-45 (4866Kg)		
	LVG Undercarriage Over Front	mm	12000
	LVG Undercarriage Over Side	mm	10500
	HVG Undercarriage Over Front	mm	13500
	HVG Undercarriage Over Side	mm	12000
F*	Maximum Reach With MP20-CR and CW-45 (3567Kg)		
	LVG Undercarriage Over Front	All The Working Ranges	
	LVG Undercarriage Over Side		
	HVG Undercarriage Over Front	All The Working Ranges	
	HVG Undercarriage Over Side		
G*	Maximum Reach With MP30-TS and CW-45 (4866Kg)		
	LVG Undercarriage Over Front	mm	14000
	LVG Undercarriage Over Side	mm	12000
	HVG Undercarriage Over Front	mm	14000
	HVG Undercarriage Over Side	mm	14000
Tip Radius MP20		mm	2500

* With Additionnal Counterweight 3000 kg

Lift Capacities - DEM70 LVG

DEM70 with long (LVG) undercarriage, retrofit boom without additionnal counterweight - All weights are in kg. Heavy lift on.

Straight Position Stick 3400 mm Shoes 600 mm Without tool

	4,5 m		6 m		7,5 m		9 m		10,5 m		12 m		Maxi		
															m
13,5 m	13648*	13648*											10467*	10467*	5,8
12 m			12897*	12897*	9043*	9043*							9043*	9043*	7,5
10,5 m			12424*	12424*	11976*	11976*	9730*	9350					8000*	8000*	9
9 m	11393*	11393*	12845*	12845*	12372*	12372*	10771*	9542	7321*	7031			7404*	7300	10,2
7,5 m	17969*	17969*	15283*	15283*	12620*	12242	10921*	9193	9583*	6918			7080*	6182	11,1
6 m			16580*	15782	13423*	11788	11259*	8884	9651*	6741	6951*	5486	6951*	5486	11,7
4,5 m			17119*	14066	13922*	10833	11429*	8240	9892*	6652	7835*	5147	6969*	5136	12
3 m					14425*	10284	11652*	7914	9772	6287	7941	5068	7140*	4899	12,2
1,5 m					13925*	9518	11581*	7592	9588	6110	7935	5041	7415*	4856	12,2
0 m			11250*	11250*	13458*	9561	11126*	7391	9127*	5962	7180*	5003	7118*	4953	12

Bent Position Stick 3400 mm Shoes 600 mm Without bucket

	3 m		4,5 m		6 m		7,5 m		9 m		10,5 m		Maxi		
															m
10,5 m							8279*	8279*					7612*	7612*	7,3
9 m							9973*	9973*	7089*	7089*			7089*	7089*	8,9
7,5 m					11833*	11833*	10431*	10431*	9441*	9441*			6957*	6957*	9,7
6 m	23587*	23587*	17837*	17837*	13515*	13515*	11261*	11261*	9866*	9468	7018*	7018*	7018*	7018*	10,5
4,5 m			18260*	18260*	15721*	15721*	12231*	11830	10448*	9212	9225*	6863	7286*	6485	10,9
3 m					17401*	15250	13225*	11024	11026*	8650	9613*	6807	7651*	6149	11
1,5 m					17954*	13885	13950*	10491	11410*	8088	9723*	6375	8329*	5961	11
0 m			9507*	9507*	18526*	13755	14459*	10156	11721*	7846	9730	6252	9340*	6004	10,8
-1,5 m			16032*	16032*	17959*	13562	14101*	9744	11486*	7574	9686*	6297	9686*	6297	10,4
-3 m			20446*	20446*	16756*	13427	13394*	9702	10876*	7656			9822*	6917	9,7
-4,5 m					14460*	13734	11981*	9905	9787*	8077			9738*	8415	8,5

Load Point Height Load Radius Over Front Load Radius Over Side

* Limited by hydraulic rather than tipping load.

The above loads are in compliance with hydraulic excavator lift capacity ratings standard ISO 10567, they do not exceed 87% of hydraulic lifting capacity or 75% of tipping capacity. Weight of all lifting accessories must be deducted from the above lifting capacities.

Lift Capacities - DEM70 LVG

DEM70 with long (LVG) undercarriage, retrofit boom with additionnal counterweight 3000kg - All weights are in kg. Heavy lift on.

Straight Position Stick 3400 mm Shoes 600 mm Without tool

	4,5 m		6 m		7,5 m		9 m		10,5 m		12 m		Maxi		m
13,5 m	13648*	13648*											10467*	10467*	5,8
12 m			12897*	12897*	9043*	9043*							9043*	9043*	7,5
10,5 m			12424*	12424*	11976*	11976*	9730*	9730*					8000*	8000*	9
9 m	11393*	11393*	12845*	12845*	12372*	12372*	10771*	10771*	7321*	7321*			7404*	7404*	10,2
7,5 m	17969*	17969*	15283*	15283*	12620*	12620*	10921*	10681	9583*	8149			7080*	7080*	11,1
6 m			16580*	16580*	13423*	13423*	11259*	10378	9651*	7969	6951*	6570	6951*	6570	11,7
4,5 m			17119*	16421	13922*	12682	11429*	9709	9892*	7898	7835*	6199	6969*	6185	12
3 m					14425*	12157	11652*	9392	9806*	7518	8238*	6122	7140*	5929	12,2
1,5 m					13925*	11338	11581*	9071	9667*	7343	8004*	6102	7415*	5887	12,2
0 m			11250*	11250*	13458*	11429	11126*	8868	9127*	7192	7180*	6062	7118*	6003	12

Bent Position Stick 3400 mm Shoes 600 mm Without bucket

	3 m		4,5 m		6 m		7,5 m		9 m		10,5 m		Maxi		m
10,5 m							8279*	8279*					7612*	7612*	7,3
9 m							9973*	9973*	7089*	7089*			7089*	7089*	8,9
7,5 m					11833*	11833*	10431*	10431*	9441*	9441*			6957*	6957*	9,7
6 m	23587*	23587*	17837*	17837*	13515*	13515*	11261*	11261*	9866*	9866*	7018*	7018*	7018*	7018*	10,5
4,5 m			18260*	18260*	15721*	15721*	12231*	12231*	10448*	10448*	9225*	8081	7286*	7286*	10,9
3 m					17401*	17401*	13225*	12862	11026*	10137	9613*	8048	7651*	7308	11
1,5 m					17954*	16327	13950*	12338	11410*	9558	9723*	7595	8329*	7122	11
0 m			9507*	9507*	18526*	16264	14459*	12025	11721*	9327	9824*	7482	9340*	7194	10,8
-1,5 m			16032*	16032*	17959*	16065	14101*	11585	11486*	9040	9686*	7547	9686*	7547	10,4
-3 m			20446*	20446*	16756*	15900	13394*	11541	10876*	9139			9822*	8271	9,7
-4,5 m					14460*	14460*	11981*	11752	9787*	9607			9738*	9738*	8,5

Load Point Height Load Radius Over Front Load Radius Over Side

* Limited by hydraulic rather than tipping load.
The above loads are in compliance with hydraulic excavator lift capacity ratings standard ISO 10567, they do not exceed 87% of hydraulic lifting capacity or 75% of tipping capacity. Weight of all lifting accessories must be deducted from the above lifting capacities.

Lift Capacities - DEM70 HVG

DEM70 with Hydraulic Variable Gauge (HVG) undercarriage, retrofit boom without additionnal counterweight

All weights are in kg. Heavy lift on.

Straight Position Stick 3400 mm Shoes 600 mm Without tool

	4,5 m		6 m		7,5 m		9 m		10,5 m		12 m		Maxi		
															m
13,5 m	13648*	13648*											10467*	10467*	5,8
12 m	13271*	13271*	12897*	12897*	9043*	9043*							9043*	9043*	7,5
10,5 m			12424*	12424*	11991*	11991*	8000*	8000*					8000*	8000*	9
9 m	11393*	11393*	12845*	12845*	12372*	12372*	10771*	10771*	7321*	7321*			7404*	7404*	10,2
7,5 m	17969*	17969*	15283*	15283*	12620*	12620*	10845*	10488	9583*	8044			7080*	7080*	11,1
6 m			16580*	16580*	13423*	13423*	11259*	10268	9651*	7862	6951*	6468	6951*	6468	11,7
4,5 m			17119*	16326	13922*	12569	11429*	9596	9892*	7790	7835*	6098	6969*	6084	12
3 m					14425*	12037	11652*	9275	9806*	7409	8238*	6020	7140*	5828	12,2
1,5 m					13925*	11214	11581*	8952	9667*	7232	8004*	6000	7415*	5786	12,2
0 m			11250*	11250*	13458*	11303	11126*	8747	9127*	7080	7180*	5959	7118*	5900	12

Bent Position Stick 3400 mm Shoes 600 mm Without bucket

	3 m		4,5 m		6 m		7,5 m		9 m		10,5 m		Maxi		
															m
10,5 m							8279*	8279*					7612*	7612*	7,3
9 m							9973*	9973*	7089*	7089*			7089*	7089*	8,9
7,5 m					11833*	11833*	10431*	10431*	9441*	9441*			6957*	6957*	9,7
6 m	23587*	23587*	17837*	17837*	13515*	13515*	11261*	11261*	9866*	9866*	7018*	7018*	7018*	7018*	10,5
4,5 m			18260*	18260*	15199*	15199*	12231*	12231*	10448*	10448*	9225*	7976	7216*	7216*	10,8
3 m					17401*	17401*	13122*	12917	11026*	10026	9613*	7941	7651*	7204	11
1,5 m					17954*	16227	13950*	12222	11410*	9443	9873*	7691	8329*	7016	11
0 m			9507*	9507*	18327*	15947	14459*	11904	11721*	9210	9891*	7440	9340*	7086	10,8
-1,5 m			16032*	16032*	17959*	15959	14101*	11461	11486*	8922	9686*	7436	9686*	7436	10,4
-3 m			20815*	20815*	16756*	15792	13394*	11417	10876*	9020			9822*	8156	9,7
-4,5 m					14926*	14926*	11981*	11630	9787*	9488			9738*	9738*	8,5

Load Point Height

Load Radius Over Front

Load Radius Over Side

* Limited by hydraulic rather than tipping load.

Lift Capacities - DEM70 HVG

DEM70 with Hydraulic Variable Gauge (HVG) undercarriage, retrofit boom with additionnal counterweight 3000kg

All weights are in kg. Heavy lift on.

Straight Position Stick 3400 mm Shoes 600 mm Without tool

	4,5 m		6 m		7,5 m		9 m		10,5 m		12 m		Maxi		
															m
13,5 m	13648*	13648*											10467*	10467*	5,8
12 m	13271*	13271*	12897*	12897*	9043*	9043*							9043*	9043*	7,5
10,5 m			12424*	12424*	11991*	11991*	8000*	8000*					8000*	8000*	9
9 m	11393*	11393*	12845*	12845*	12372*	12372*	10771*	10771*	7321*	7321*			7404*	7404*	10,2
7,5 m	17969*	17969*	15283*	15283*	12620*	12620*	10845*	10845*	9583*	9298			7080*	7080*	11,1
6 m			16580*	16580*	13423*	13423*	11259*	11259*	9651*	9113	6951*	6951*	6951*	6951*	11,7
4,5 m			17119*	17119*	13922*	13922*	11429*	11095	9892*	9060	7835*	7169	6969*	6969*	12
3 m					14425*	13953	11652*	10783	9806*	8663	8238*	7092	7140*	6877	12,2
1,5 m					13925*	13075	11581*	10461	9667*	8489	8004*	7081	7415*	6836	12,2
0 m			11250*	11250*	13458*	13213	11126*	10255	9127*	8333	7180*	7037	7118*	6969	12

Bent Position Stick 3400 mm Shoes 600 mm Without bucket

	3 m		4,5 m		6 m		7,5 m		9 m		10,5 m		Maxi		
															m
10,5 m							8279*	8279*					7612*	7612*	7,3
9 m							9973*	9973*	7089*	7089*			7089*	7089*	8,9
7,5 m					11833*	11833*	10431*	10431*	9441*	9441*			6957*	6957*	9,7
6 m	23587*	23587*	17837*	17837*	13515*	13515*	11261*	11261*	9866*	9866*	7018*	7018*	7018*	7018*	10,5
4,5 m			18260*	18260*	15199*	15199*	12231*	12231*	10448*	10448*	9225*	9218	7216*	7216*	10,8
3 m					17401*	17401*	13122*	13122*	11026*	11026*	9613*	9206	7651*	7651*	11
1,5 m					17954*	17954*	13950*	13950*	11410*	10943	9873*	8958	8329*	8199	11
0 m			9507*	9507*	18327*	18327*	14459*	13815	11721*	10720	9891*	8700	9340*	8299	10,8
-1,5 m			16032*	16032*	17959*	17959*	14101*	13343	11486*	10419	9686*	8710	9686*	8710	10,4
-3 m			20815*	20815*	16756*	16756*	13394*	13297	10876*	10534			9822*	9536	9,7
-4,5 m					14926*	14926*	11981*	11981*	9787*	9787*			9738*	9738*	8,5

Load Point Height Load Radius Over Front Load Radius Over Side

* Limited by hydraulic rather than tipping load.

Lift Capacities - DEM70 LVG

DEM70 with long (LVG) undercarriage, retrofit boom and extension 3m without additionnal counterweight
All weights are in kg. Heavy lift on.

Straight Position Stick 3400 mm Shoes 600 mm Without tool

	4,5 m		6 m		7,5 m		9 m		10,5 m		12 m		13,5 m		15 m		Maxi		
16,5 m	13557*	13557*	11001*	11001*													6434*	5283	8,8
15 m			13057*	13057*	10971*	10971*	9051*	9051*									6434*	5283	8,8
13,5 m			12423*	12423*	10726*	10726*	9371*	9371*	8147*	6875							8173*	6956	10,2
12 m	11393*	11393*	12586*	12586*	11251*	11251*	9048*	8851	7838*	6574	7041*	5036					7237*	5340	11,5
10,5 m	17707*	17707*	14342*	14342*	11007*	11007*	9324*	8859	8065*	6794	6896*	4914					6394*	4084	12,9
9 m			13686*	13686*	11445*	10946	9407*	8133	7935*	6105	6925*	4811	5999*	3560			6012*	3570	13,5
7,5 m					11331*	9092	9522*	7367	8058*	5745	6994*	4637	5923	3464			5376	3066	14,2
6 m							9568*	6458	8089*	5276	6870*	4178	5815	3348	4917	2717	4917	2717	14,7
4,5 m							9268*	5600	8058*	4828	6747	3876	5659	3189	4699	2544	4624	2489	15
3 m							8723*	5070	7809*	4441	6564	3676	5426	2980	4603	2455	4498	2387	15,1
1,5 m							8039*	4813	7412*	4193	6261	3418	5301	2857	4359*	2377	4199*	2340	15,1
0 m							7112*	4984	6706*	4019	5889*	3348	4959*	2780	3834*	2377	3834*	2377	15

Lift Capacities - DEM70 HVG

DEM70 with Hydraulic Variable Gauge (HVG) undercarriage retrofit boom and extension 3m without additionnal counterweight
All weights are in kg. Heavy lift on.

Straight Position Stick 3400 mm Shoes 600 mm Without tool

	4,5 m		6 m		7,5 m		9 m		10,5 m		12 m		13,5 m		15 m		Maxi		
16,5 m	13557*	13557*	11001*	11001*													6434*	6434*	8,8
15 m			13057*	13057*	10971*	10971*	9051*	9051*									6434*	6434*	8,8
13,5 m			12423*	12423*	10728*	10728*	9064*	9064*	8147*	8037							8173*	8130	10,2
12 m	11393*	11393*	12586*	12586*	11251*	11251*	9048*	9048*	7838*	7691	7041*	6012					7237*	6346	11,5
10,5 m	17707*	17707*	14342*	14342*	11007*	11007*	9324*	9324*	8065*	7947	6893*	5868					6539*	5189	12,6
9 m			13686*	13686*	11445*	11445*	9407*	9407*	7935*	7222	6925*	5771	5999*	4388			6012*	4399	13,5
7,5 m					11331*	10751	9522*	8725	8058*	6869	6994*	5604	5955*	4289			5586*	3848	14,2
6 m							9568*	7805	8089*	6399	6870*	5128	5947*	4177	5217*	3467	5217*	3467	14,7
4,5 m							9384*	7079	8058*	5956	6792*	4825	5883*	4020	4970*	3281	4868*	3220	15
3 m							8723*	6354	7809*	5568	6607*	4566	5660*	3807	4757*	3191	4600*	3111	15,1
1,5 m							8039*	6096	7412*	5314	6427*	4454	5382*	3684	4332*	3087	4308*	3066	15,1
0 m							7112*	6320	6706*	5129	5889*	4301	4959*	3607	3834*	3112	3834*	3112	15

Load Point Height

Load Radius Over Front

Load Radius Over Side

* Limited by hydraulic rather than tipping load.

Lift Capacities - DEM70 LVG

DEM70 with long (LVG) undercarriage, retrofit boom and extension 3m with additionnal counterweight 3000kg
All weights are in kg. Heavy lift on.

Straight Position Stick 3400 mm Shoes 600 mm Without tool

	4,5 m		6 m		7,5 m		9 m		10,5 m		12 m		13,5 m		15 m		Maxi		m
16,5 m	13557*	13557*	11001*	11001*													6434*	6434*	8,8
15 m			13057*	13057*	10971*	10971*	9051*	9051*									6434*	6434*	8,8
13,5 m			12423*	12423*	10726*	10726*	9371*	9371*	8147*	8136							8173*	8173*	10,2
12 m	11393*	11393*	12586*	12586*	11251*	11251*	9048*	9048*	7838*	7789	7041*	6108					7237*	6443	11,5
10,5 m	17707*	17707*	14342*	14342*	11007*	11007*	9324*	9324*	8065*	8046	6896*	5966					6394*	5056	12,9
9 m			13686*	13686*	11445*	11445*	9407*	9407*	7935*	7323	6925*	5866	5999*	4478			6012*	4489	13,5
7,5 m					11331*	10864	9522*	8835	8058*	6973	6994*	5701	5955*	4379			5586*	3936	14,2
6 m							9568*	7922	8089*	6507	6870*	5227	5947*	4268	5217*	3553	5217*	3553	14,7
4,5 m							9268*	7044	8058*	6068	6792*	4926	5883*	4113	4970*	3367	4868*	3306	15
3 m							8723*	6477	7809*	5676	6691*	4737	5660*	3900	4757*	3277	4600*	3197	15,1
1,5 m							8039*	6222	7412*	5429	6276*	4468	5382*	3779	4359*	3196	4199*	3151	15,1
0 m							7112*	6448	6706*	5245	5889*	4406	4959*	3701	3834*	3198	3834*	3198	15

Lift Capacities - DEM70 HVG

DEM70 with Hydraulic Variable Gauge (HVG) undercarriage retrofit boom and extension 3m with additionnal counterweight 3000kg
All weights are in kg. Heavy lift on.

Straight Position Stick 3400 mm Shoes 600 mm Without tool

	4,5 m		6 m		7,5 m		9 m		10,5 m		12 m		13,5 m		15 m		Maxi		m
16,5 m	13557*	13557*	11001*	11001*													6434*	6434*	8,8
15 m			13057*	13057*	10971*	10971*	9051*	9051*									6434*	6434*	8,8
13,5 m			12423*	12423*	10728*	10728*	9064*	9064*	8147*	8147*							8173*	8173*	10,2
12 m	11393*	11393*	12586*	12586*	11251*	11251*	9048*	9048*	7838*	7838*	7041*	7041*					7237*	7237*	11,5
10,5 m	17707*	17707*	14342*	14342*	11007*	11007*	9324*	9324*	8065*	8065*	6893*	6893*					6539*	6200	12,6
9 m			13686*	13686*	11445*	11445*	9407*	9407*	7935*	7935*	6925*	6845	5999*	5322			6012*	5335	13,5
7,5 m					11331*	11331*	9522*	9522*	8058*	8058*	6994*	6687	5955*	5219			5586*	4732	14,2
6 m							9568*	9299	8089*	7654	6870*	6196	5947*	5113	5217*	4318	5217*	4318	14,7
4,5 m							9384*	8564	8058*	7219	6792*	5895	5883*	4961	4970*	4118	4868*	4051	15
3 m							8723*	7790	7809*	6822	6607*	5632	5660*	4742	4757*	4027	4600*	3935	15,1
1,5 m							8039*	7533	7412*	6573	6427*	5535	5382*	4622	4332*	3916	4306*	3890	15,1
0 m							7112*	7112*	6706*	6378	5889*	5378	4959*	4544	3834*	3834*	3834*	3834*	15

Load Point Height

Load Radius Over Front

Load Radius Over Side

* Limited by hydraulic rather than tipping load.

DEM70 Demlone

Technical Supplement

The DEM50 is not available in all regions. We reserve the right to alter specifications and design, without prior notification. In some instances, illustrations within this document may not accurately depict the standard configuration of the product.

www.demlone.com